TSL 310 FLEXDRIVE

SIDE CHANNEL BLOWER

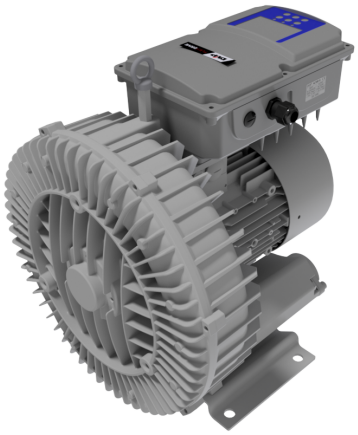

TECHNICAL DATA

		TSL 310 FLEXDRIVE
Part number		9412022/FD
Inverter power	**HP**	9.4
Inverter power supply		230÷400Vac±20% 50/60Hz
Frequency	**Hz**	30 ÷ 60
Nominal flow rate	**CFM**	221.45
MAX Vacuum (Rel.)	**inHg**	5.61
MAX Pressure (Rel.)	**inHg**	5.61
Maximum inlet air temperature	**°F**	104
Noise level (UNI EN ISO 2151±3dB)	**dB(A)**	72
Weight	**LBS**	72.6

Subject to change without notice
09/22/2026 04:10 PM

CURVES

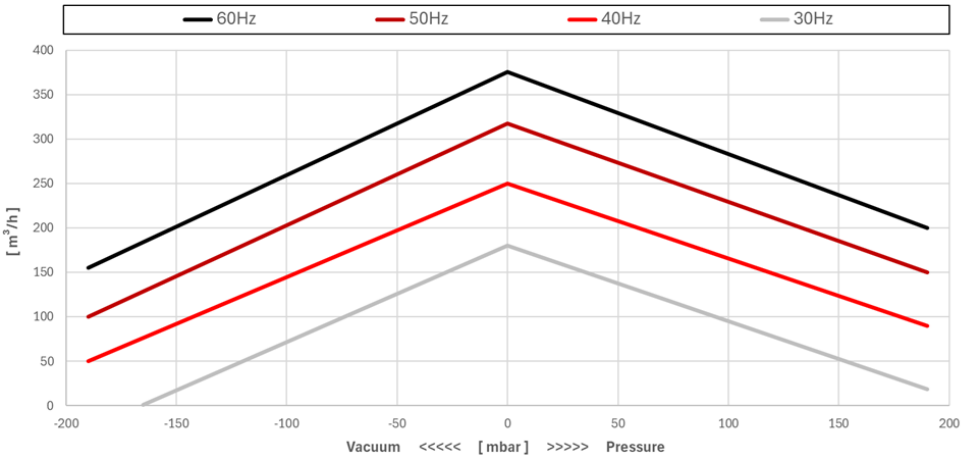

NOTE: Curves refer to suction pressure and temperature of 20°C (tolerance ±10%)

TSL 310 FLEXDRIVE

SIDE CHANNEL BLOWER

DIMENSIONS

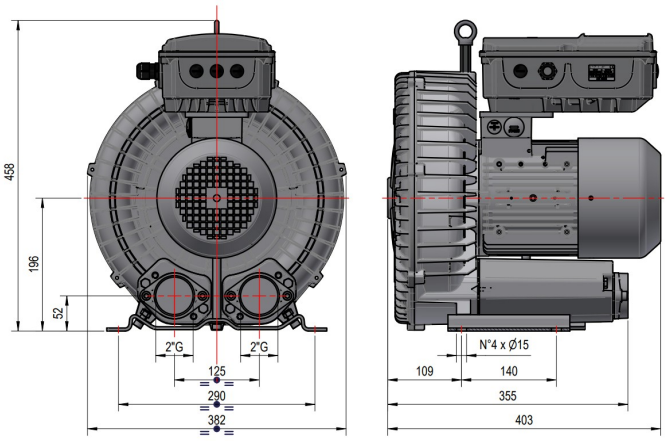

MOTORS

TSL 310 FLEXDRIVE [3 Phase]						
ID	POWER [Hp]	VOLTAGE [V]	FREQUENCY [Hz]	EFFICIENCY	RPM	Notes
///	2.95 3.4	Δ230 / Y400 Δ265 / Y460	50 60	IE3	2800 3600	

09/22/2026 04:10 PM Subject to change without notice

TSL 310 FLEXDRIVE

SIDE CHANNEL BLOWER

VACUUM

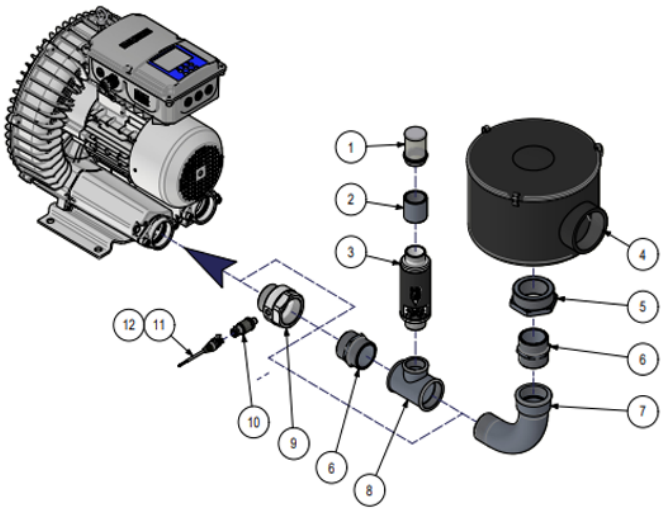

PRESSURE

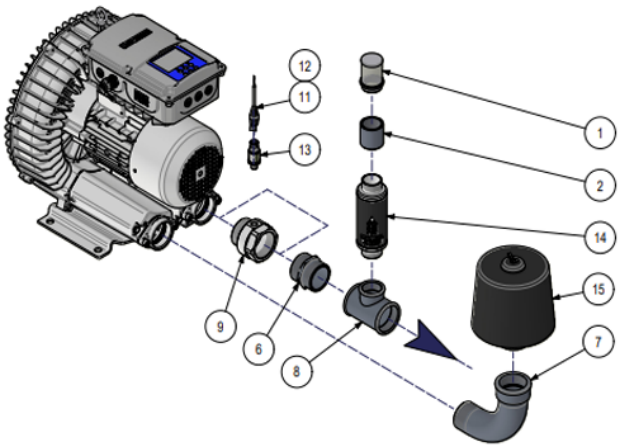

ACCESSORIES

		PART NUMBER
1	Filter FAR	1802017
2	Pipe	5002011
3	Vacuum relief valve	9407030
4	FCM Filter	9001041
5	Reducer	2001050
6	Nipples	2201007
7	Elbow	2101018
8	T Fitting	2106047
9	Fitting	4111008
10	Vacuum sensor	1313006
11	Sensor connection cable 1M	1303056
12	Sensor connection cable 5M	1303055
13	Pressure transducer	1313005
14	Pressure relief valve	9408019
15	FAS Filter	9001061

09/22/2026 04:10 PM Subject to change without notice