SC 5CC

OIL-FREE ROTARY VANE VACUUM PUMP

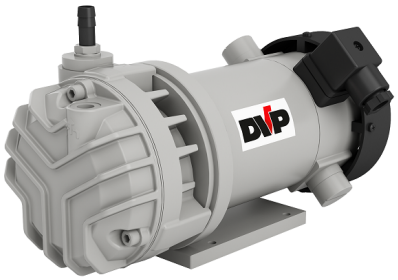

TECHNICAL DATA

		SC 5CC
Part number		9813008
Nominal flow rate	**CFM**	2.95
Final total pressure	**Torr (Abs)**	112.5
Maximum overpressure		0,5
Noise level @ pump (UNI EN ISO 2151±3dB)	**dB(A)**	59
Noise level @ compressor (UNI EN ISO 2151±3dB)	**dB(A)**	62
Weight	**LBS**	9.9

11/12/2026 10:30 AM Subject to change without notice

CURVES

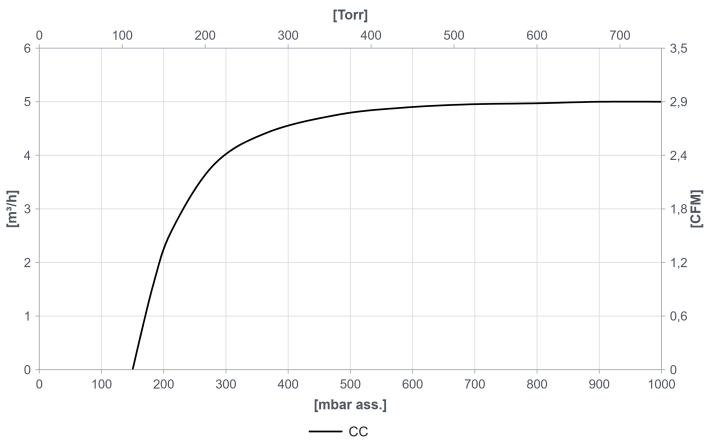

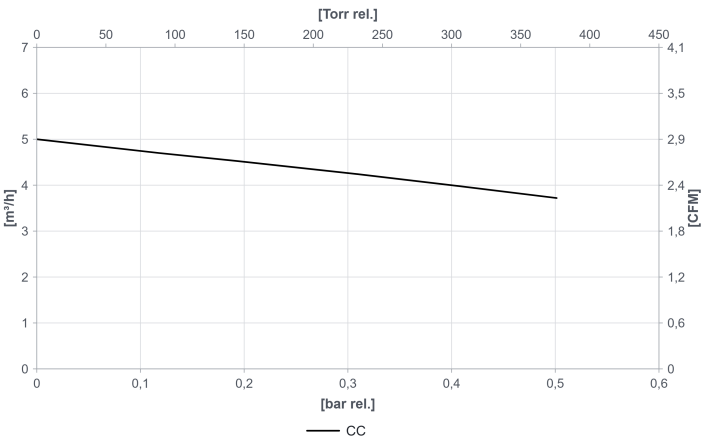

NOTE: Curves refer to suction pressure and temperature of 20°C (tolerance ±10%)

SC 5CC

OIL-FREE ROTARY VANE VACUUM PUMP

DIMENSIONS

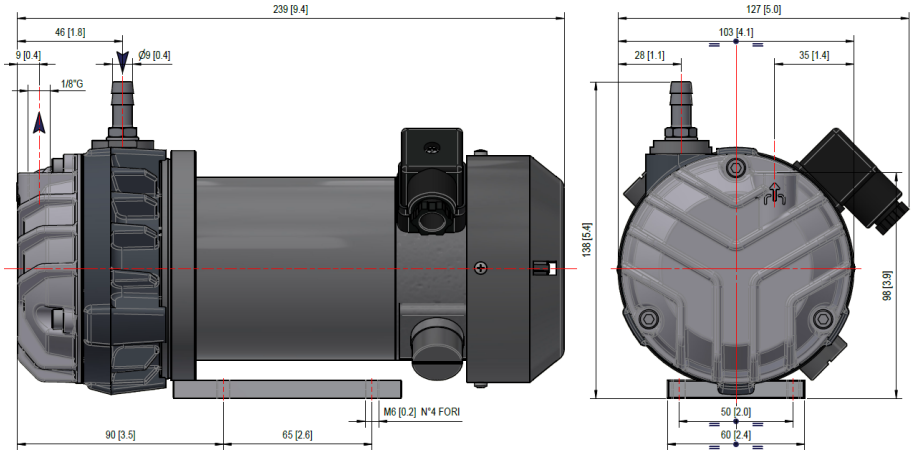

MOTORS

SC 5CC [24 Vdc]						
ID	**POWER [Hp]**	**VOLTAGE [V]**	**FREQUENCY [Hz]**	**EFFICIENCY**	**RPM**	**Notes**
CB	0.1	24V	DC	///	2500	

11/12/2026 10:30 AM Subject to change without notice

SC 5CC

OIL-FREE ROTARY VANE VACUUM PUMP

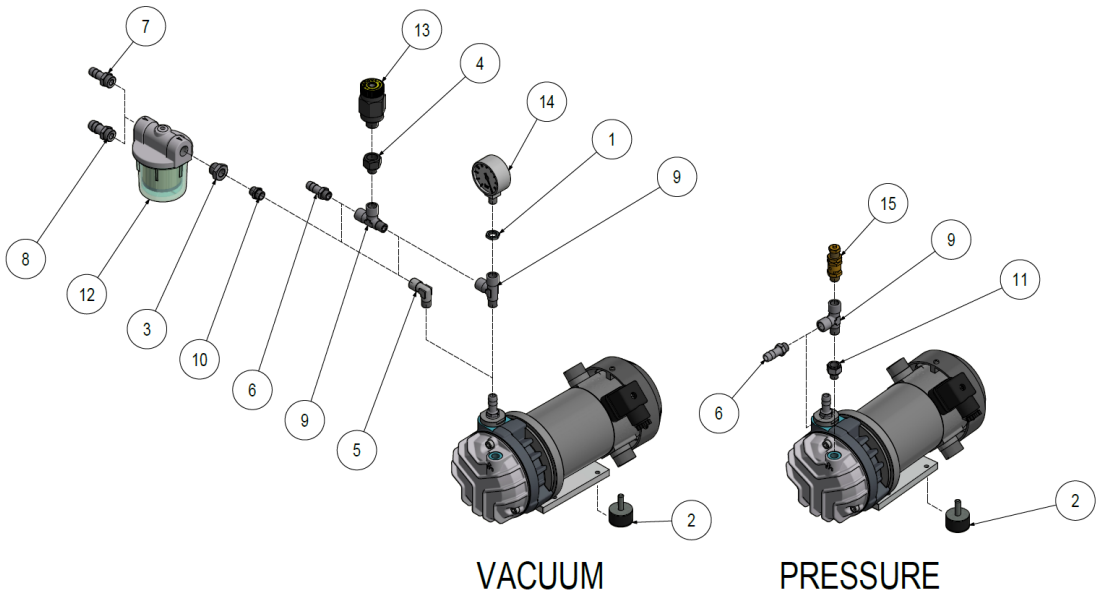

ACCESSORIES

		PART NUMBER
1	Nut	0202001
2	Anti-vibration mount	4 x 1503005
3	Reducer	2001012
4	Reducer	2001024
5	Elbow fitting	2101001
6	Hose barb fitting ATG	2103003
7	Hose barb fitting ATG	2103004 (Ø 9)
8	Hose barb fitting ATG	2103006 (Ø12)
9	T Fitting	2106058
10	Nipples	2201005
11	Reducer	2202007
12	Cartridge Filter	9001003
13	Vacuum regulating valve	9004012
14	VMR Vacuum Gauge	9009004
15	Pressure relief valve	9012010

11/12/2026 10:30 AM Subject to change without notice