LC 305HV

OIL-LUBRICATED ROTARY VANE VACUUM PUMP

TECHNICAL DATA

		LC 305 HV
Part number		9603039
Frequency	**Hz**	50 60
Nominal flow rate	**CFM**	179.65 215
Final pressure Gas Ballast closed	**Torr (Abs)**	0.1
Final pressure Gas Ballast open	**Torr (Abs)**	0.4
Max inlet pressure for Gas Ballast open water vapour	**Torr (Abs)**	9
Max water vapour pumping rate Gas Ballast open	**lb/h**	7.7
Continuous operating range	**Torr (Abs)**	300 ÷ 0.1
Maximum inlet air temperature	**°F**	104
Oil type		SW 100
Oil capacity (Min - Max)	**in³**	244.1 ÷ 305.1
Noise level (UNI EN ISO 2151±3dB)	**dB(A)**	71 73
Weight	**LBS**	396

09/03/2026 04:35 PM Subject to change without notice

CURVES

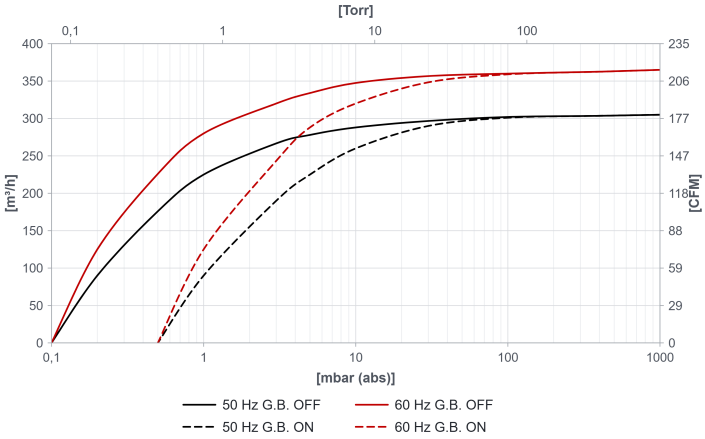

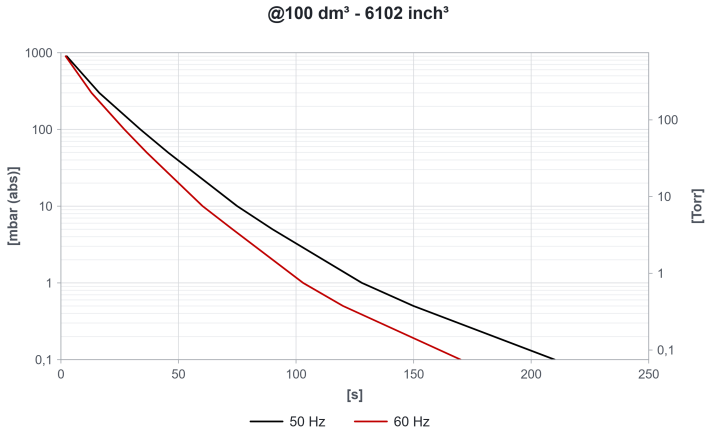

NOTE: Curves refer to suction pressure and temperature of 20°C (tolerance ±10%)

LC 305HV

OIL-LUBRICATED ROTARY VANE VACUUM PUMP

DIMENSIONS

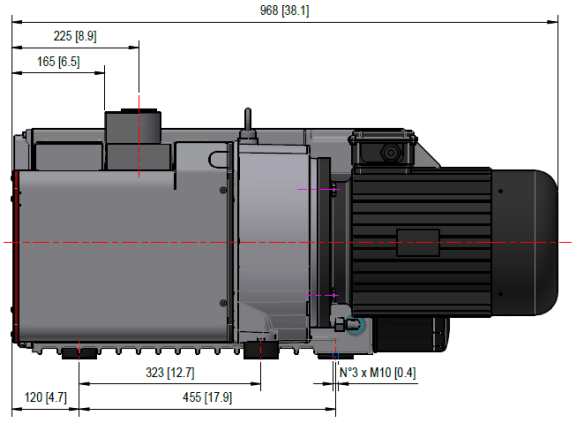

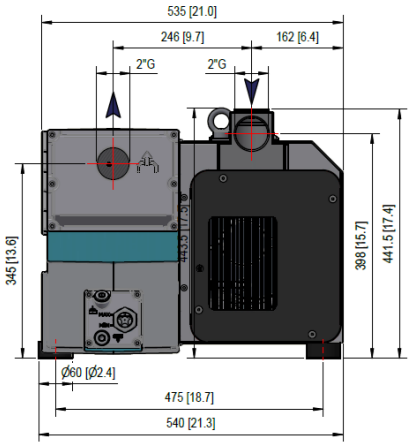

MOTORS

LC 305 HV [3 Phase]						
ID	POWER [Hp]	VOLTAGE [V]	FREQUENCY [Hz]	EFFICIENCY	RPM	Notes
SF	10.05 10.05	Δ230-240/Y400-415 Δ265/Y460	50 60	IE3	1400 1700	
SL	9.4 12.35 12.35	YY190-200/Y380-400 YY208-230/Y460 YY200-220/Y400-440	50 60 60	IE3	1400 1700 1700	UL

09/03/2026 04:35 PM Subject to change without notice

LC 305HV

OIL-LUBRICATED ROTARY VANE VACUUM PUMP

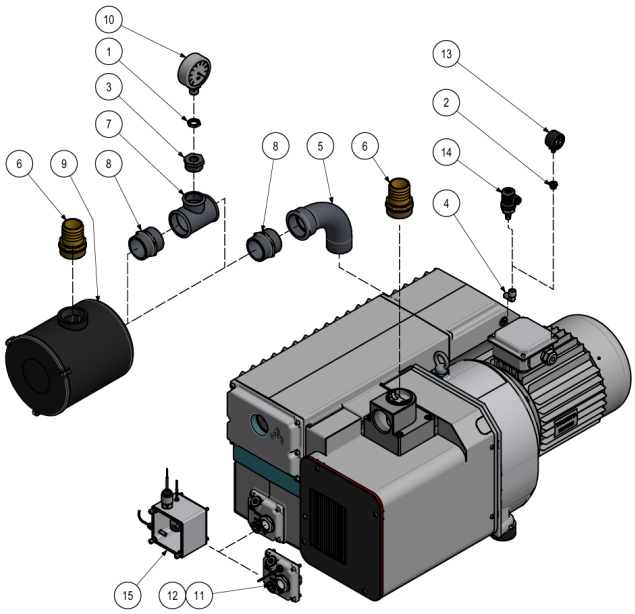

ACCESSORIES

		PART NUMBER
1	Nut	0202004
2	Reducer	2001012
3	Reducer	2001017
4	Elbow	2101002
5	Elbow	2101018
6	Hose barb fitting ATG	2103016
7	T Fitting	2106047
8	Nipples	2201007
9	FCM Filter	9001019
10	VMR Vacuum Gauge	9009003
11	Oil level minimum electrical kit (N.C.)	9013014
12	Oil level minimum electrical kit (N.O.)	9013015
13	Filter clogging pressure gauge SIF	9014003
14	Clogged SIF filter switch	9019001
15	Sensor kit	3021003

09/03/2026 04:35 PM Subject to change without notice