LC 151Kzero

OIL-LUBRICATED ROTARY VANE VACUUM PUMP

TECHNICAL DATA

		LC 151 Kzero
Part number		9603037
Frequency	**Hz**	50 60
Nominal flow rate	**CFM**	88.95 106.6
Final total pressure	**Torr (Abs)**	3
Max inlet pressure for water vapour	**Torr (Abs)**	8.25
Max water vapour pumping rate	**lb/h**	3.1
Continuous operating range	**Torr (Abs)**	300 ÷ 3
Maximum inlet air temperature	**°F**	104
Oil type		SYN HP 110
Oil capacity (Min - Max)	**in³**	122.05 ÷ 183.05
Noise level (UNI EN ISO 2151±3dB)	**dB(A)**	69 71
Weight	**LBS**	176

09/29/2026 10:42 AM Subject to change without notice

CURVES

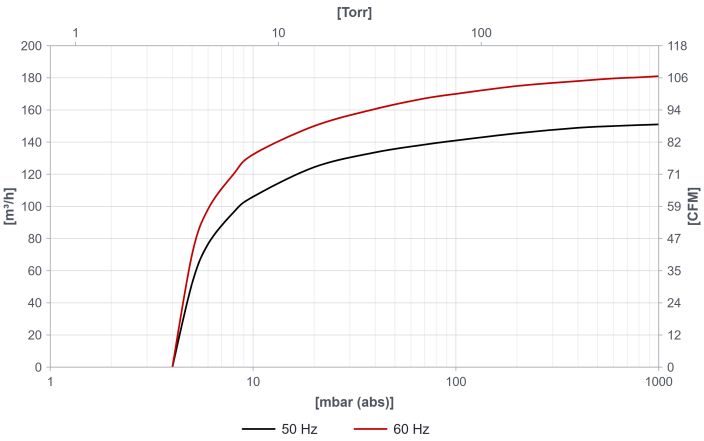

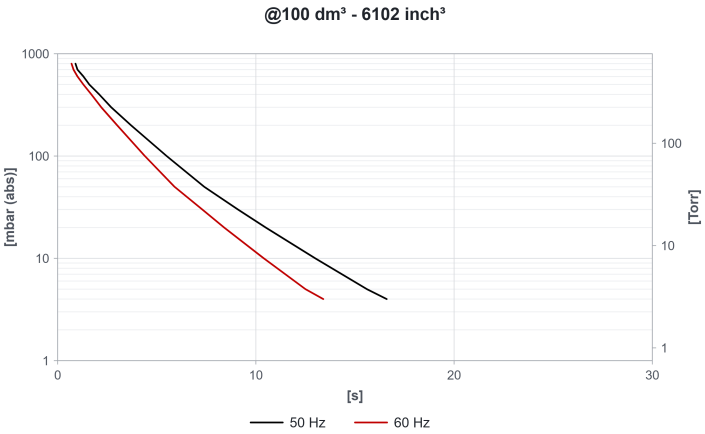

NOTE: Curves refer to suction pressure and temperature of 20°C (tolerance ±10%)

LC 151Kzero

OIL-LUBRICATED ROTARY VANE VACUUM PUMP

DIMENSIONS

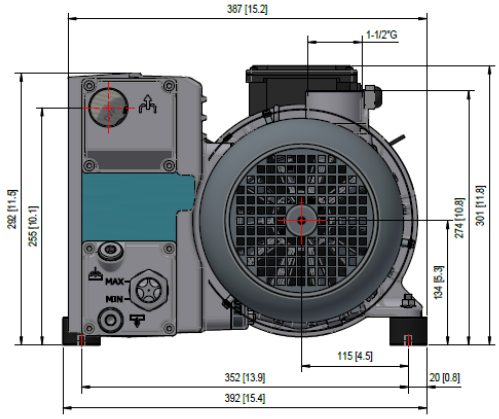

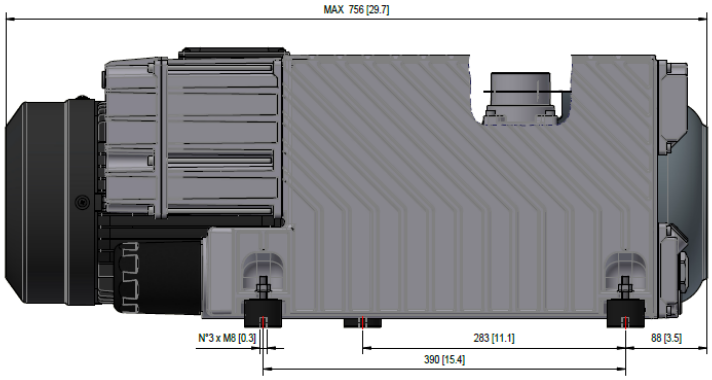

MOTORS

LC 151 Kzero [3 Phase]						
ID	**POWER [Hp]**	**VOLTAGE [V]**	**FREQUENCY [Hz]**	**EFFICIENCY**	**RPM**	**Notes**
SF	4.45 5.35	Δ230-240 / Y400-415 Δ265 / Y460	50 60	IE3	1400 1700	
SL	5.35 5.35 5.35	YY190-200 / Y380-440 YY208-230 / Y460 YY200-220 / Y400-440	50 60 60	IE3	1400 1700 1700	UL

09/29/2026 10:42 AM Subject to change without notice

LC 151Kzero

OIL-LUBRICATED ROTARY VANE VACUUM PUMP

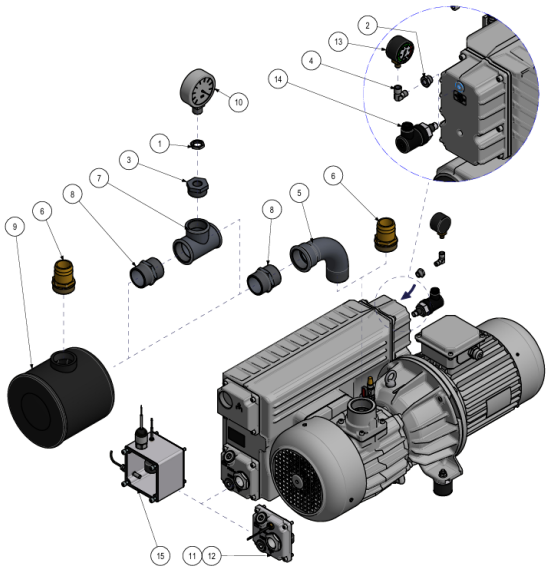

ACCESSORIES

		PART NUMBER
1	Nut	0204004
2	Reducer	2001012
3	Reducer	2001017
4	Elbow fitting	2101001
5	Elbow	2101016
6	Hose barb fitting ATG	2103015
7	T Fitting	2106056
8	Nipples	2201011
9	FCM Filter	9001018
10	VMR Vacuum Gauge	9009003
11	Oil level minimum electrical kit (N.C.)	9013014
12	Oil level minimum electrical kit (N.O.)	9013015
13	Filter clogging pressure gauge SIF	9014003
14	Clogged SIF filter switch	9019001
15	Sensor kit	9021003

09/29/2026 10:42 AM Subject to change without notice