DC 8D

OIL-LUBRICATED ROTARY VANE VACUUM PUMP

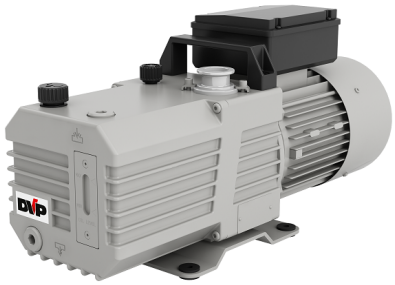

TECHNICAL DATA

		DC 8D
Part number		9602025
Frequency	**Hz**	50 60
Number of stages		2
Nominal flow rate	**CFM**	5.3 6.5
Pneurop flow rate	**CFM**	4.85 5.65
Final pressure Gas Ballast closed	**Torr (Abs)**	0
Partial final pressure	**Torr (Abs)**	0
Final pressure Gas Ballast open	**Torr (Abs)**	0.15
Max inlet pressure for water vapour	**Torr (Abs)**	18.75 24.75
Max water vapour pumping rate	**lb/h**	0.35 0.55
Oil type		SW100
Oil capacity (Min - Max)	**in³**	0,75÷1
Noise level (UNI EN ISO 2151±3dB)	**dB(A)**	52 54
Weight	**LBS**	51.7

CURVES

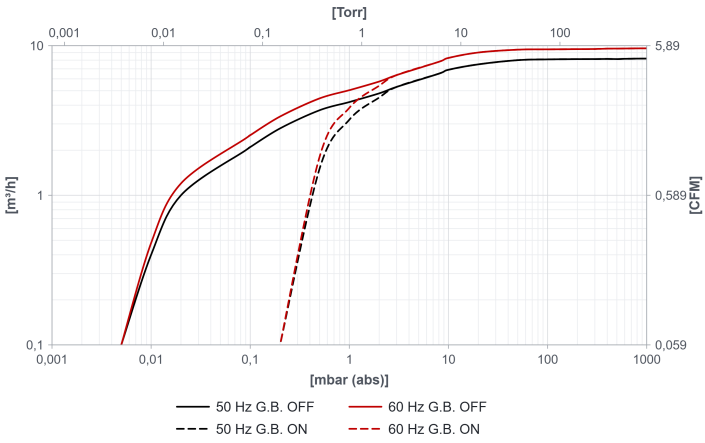

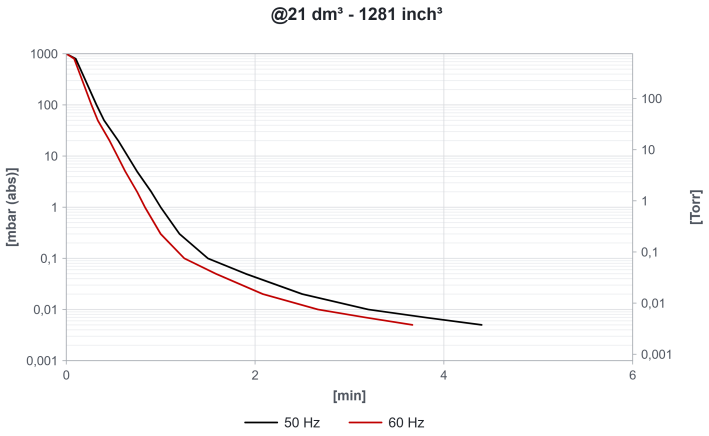

NOTE: Curves refer to suction pressure and temperature of 20°C (tolerance ±10%)

11/23/2026 03:36 PM Subject to change without notice

DC 8D

OIL-LUBRICATED ROTARY VANE VACUUM PUMP

DIMENSIONS

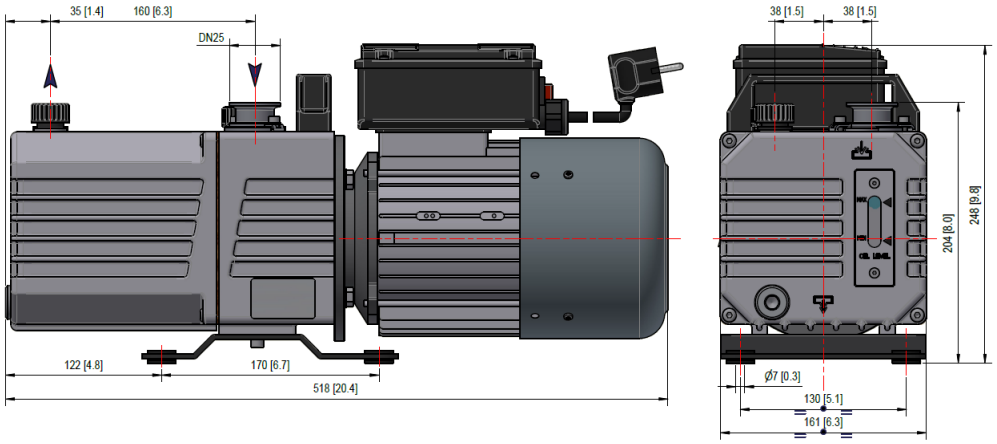

MOTORS

DC 8D [1 Phase]						
ID	**POWER [Hp]**	**VOLTAGE [V]**	**FREQUENCY [Hz]**	**EFFICIENCY**	**RPM**	**Notes**
MA	1 1.2	220-240	50 60	-	1400 1700	
MF	1.2	110-115	60	-	1700	
MN	1 1.2	100	50 60	-	1400 1700	
DC 8D [3 Phase]						
TX	0.75 0.75	Δ230/Y400 Δ265/Y460	50 60	IE2	1400 1700	

11/23/2026 03:36 PM Subject to change without notice

DC 8D

OIL-LUBRICATED ROTARY VANE VACUUM PUMP

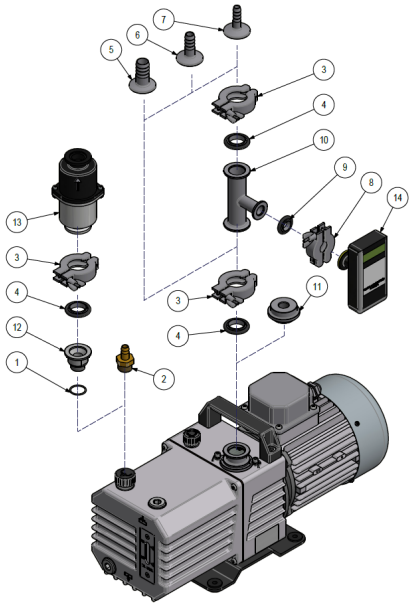

ACCESSORIES

		PART NUMBER
1	O-ring	1001044/V
2	Hose barb fitting ATG	2103008
3	Clamping ring KF	2104001
4	Centring ring	2104002
5	Hose barb fitting ATG	2104003 (DN25x20)
6	Hose barb fitting ATG	2104004 (DN25x15)
7	Hose barb fitting ATG	2104007 (DN25x12)
8	Clamping ring KF	2104011
9	Centring ring	2104012
10	T Fitting	2104016
11	Inlet fitting	4508016
12	Fitting	4605017
13	FDS Filter	9001054
14	VD Vacuum Gauge	9009052

VARIANTS

PFPE	Applications with over-concentration of Oxygen
ATEX	Pump equipped with ATEX motor

11/23/2026 03:36 PM Subject to change without notice