DC 4D

OIL-LUBRICATED ROTARY VANE VACUUM PUMP

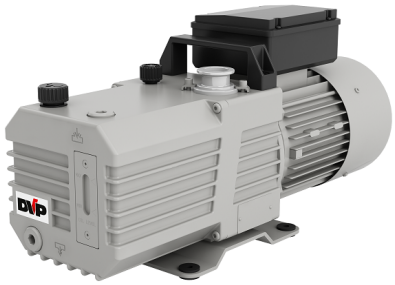

TECHNICAL DATA

		DC 4D
Part number		9602024
Frequency	**Hz**	50 60
Number of stages		2
Nominal flow rate	**CFM**	3.85 4.4
Pneurop flow rate	**CFM**	3.3 3.75
Final pressure Gas Ballast closed	**Torr (Abs)**	0
Partial final pressure	**Torr (Abs)**	0
Final pressure Gas Ballast open	**Torr (Abs)**	0.2
Max inlet pressure for water vapour	**Torr (Abs)**	27.75 38.25
Max water vapour pumping rate	**lb/h**	0.35 0.5
Oil type		SW100
Oil capacity (Min - Max)	**in³**	27.45
Noise level (UNI EN ISO 2151±3dB)	**dB(A)**	52 54
Weight	**LBS**	49.5

11/23/2026 03:34 PM Subject to change without notice

CURVES

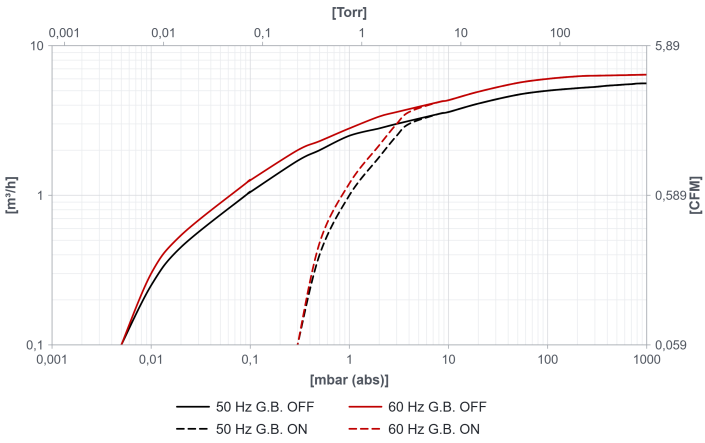

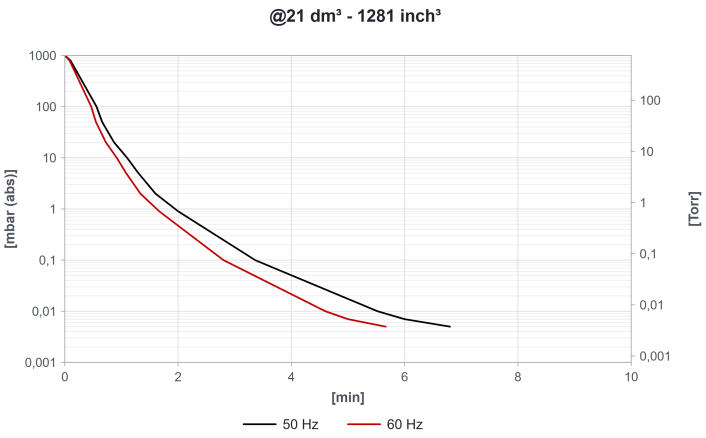

NOTE: Curves refer to suction pressure and temperature of 20°C (tolerance ±10%)

DC 4D

OIL-LUBRICATED ROTARY VANE VACUUM PUMP

DIMENSIONS

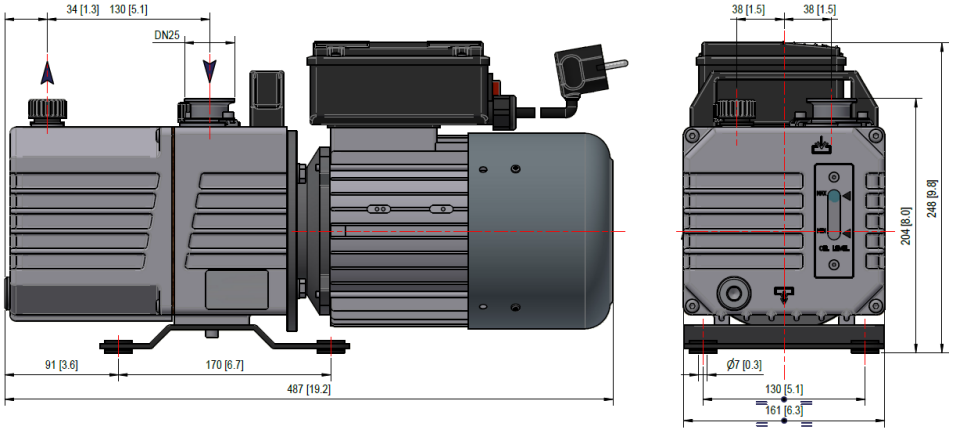

MOTORS

ID	POWER [Hp]	VOLTAGE [V]	FREQUENCY [Hz]	EFFICIENCY	RPM	Notes
DC 4D [1 Phase]						
MA	1 1.2	220-240	50 60	-	1400 1700	
MF	1.2	110-115	60	-	1700	
DC 4D [3 Phase]						
TX	0.75 0.75	Δ230/Y400 Δ265/Y460	50 60	IE2	1400 1700	

11/23/2026 03:34 PM Subject to change without notice

DC 4D

OIL-LUBRICATED ROTARY VANE VACUUM PUMP

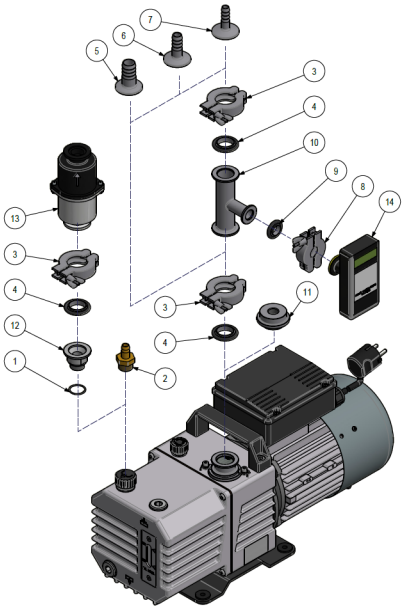

ACCESSORIES

		PART NUMBER
1	O-ring	1001044/V
2	Hose barb fitting ATG	2103008
3	Clamping ring KF	2104001
4	Centring ring	2104002
5	Hose barb fitting ATG	2104003 (DN25x20)
6	Hose barb fitting ATG	2104004 (DN25x15)
7	Hose barb fitting ATG	2104007 ((DN25x12)
8	Clamping ring KF	2104011
9	Centring ring	2104012
10	T Fitting	2104016
11	Inlet fitting	4508016
12	Fitting	4605017
13	FDS Filter	9007054
14	VD Vacuum Gauge	9009052

VARIANTS

ATEX	Pump equipped with ATEX motor

11/23/2026 03:34 PM Subject to change without notice