ZA 200P

OIL FREE VACUUM PUMP

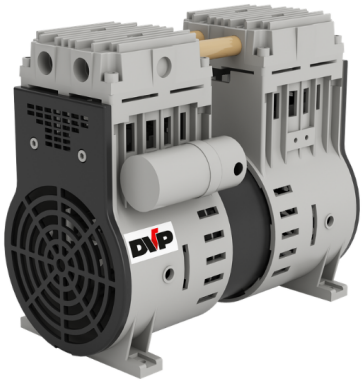

TECHNICAL DATA

		ZA 200P
Part number		9210033
Frequency	**Hz**	50 60
Nominal flow rate	**l/min**	186 224
Final total pressure	**mbar (Abs)**	60
Noise level (UNI EN ISO 2151±3dB)	**dB(A)**	59
Weight	**kg**	11,5

Subject to change without notice
25/09/2026 15:38

CURVES

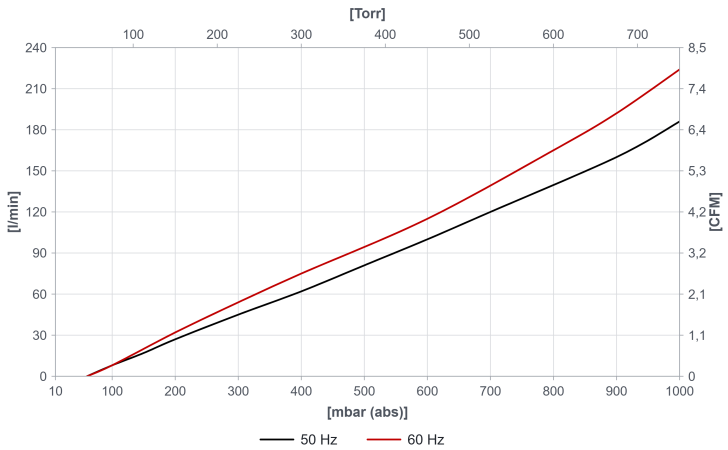

NOTE: Curves refer to suction pressure and temperature of 20°C (tolerance ±10%)

ZA 200P

OIL FREE VACUUM PUMP

DIMENSIONS

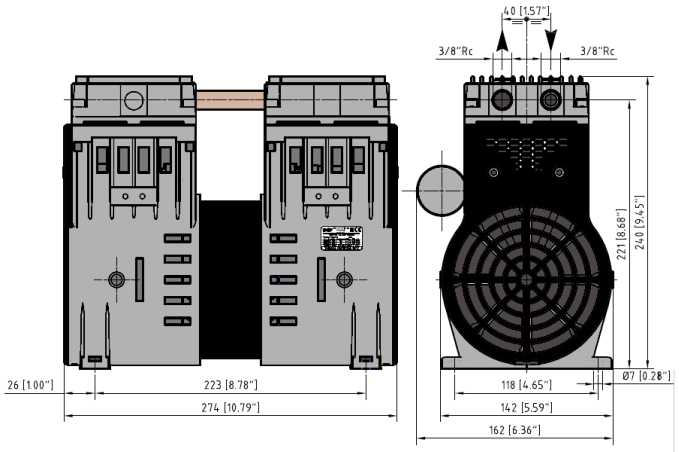

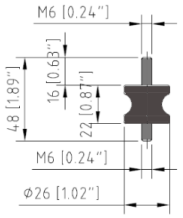

ANTI-VIBRATION MOUNT

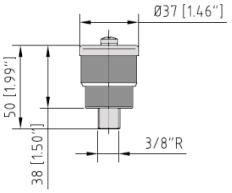

SILENCER

MOTORS

ZA 200P [1 Phase]						
ID	**POWER [kW]**	**VOLTAGE [V]**	**FREQUENCY [Hz]**	**EFFICIENCY**	**RPM**	**Notes**
9210033	0,58 0,58	230	50 60	///	/// ///	

25/09/2026 15:38 Subject to change without notice

ZA 200P

OIL FREE VACUUM PUMP

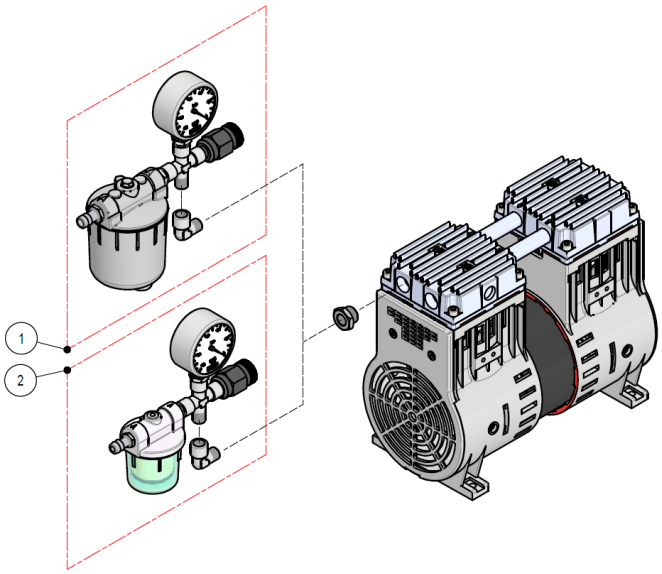

ACCESSORIES

		PART NUMBER
1	Vacuum regulating kit + FSC filter	9017001
2	Vacuum regulating kit + FCT filter	9017002

25/09/2026 15:38 Subject to change without notice