TSL 550-0 FLEXDRIVE

SIDE CHANNEL BLOWER

TECHNICAL DATA

		TSL 550-0 FLEXDRIVE
Part number		9412027/FD
Inverter power	**kW**	7
Inverter power supply		230÷400Vac±20% 50/60Hz
Frequency	**Hz**	30 ÷ 60
Nominal flow rate	**m³/h**	620
MAX Vacuum (Rel.)	**mbar – hPa**	-160
MAX Pressure (Rel.)	**mbar – hPa**	+160
Maximum inlet air temperature	**°C**	40
Noise level (UNI EN ISO 2151±3dB)	**dB(A)**	74
Weight	**kg**	58

Subject to change without notice
22/09/2026 16:08

CURVES

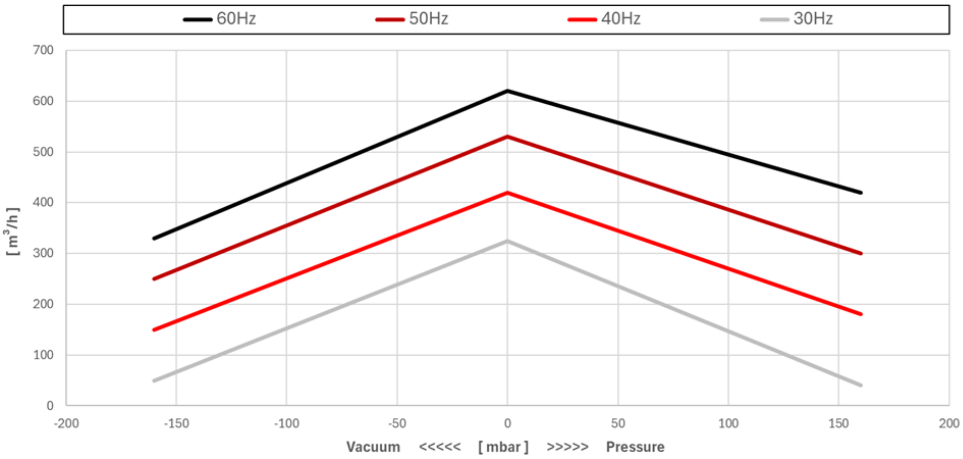

NOTE: Curves refer to suction pressure and temperature of 20°C (tolerance ±10%)

TSL 550-0 FLEXDRIVE

SIDE CHANNEL BLOWER

DIMENSIONS

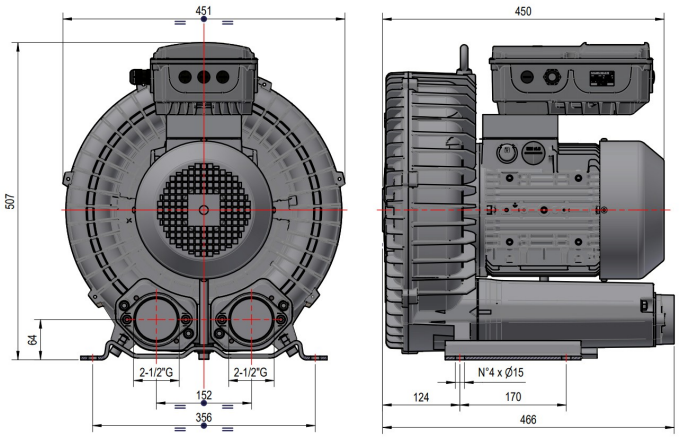

MOTORS

TSL 550-0 FLEXDRIVE [3 Phase]						
ID	POWER [kW]	VOLTAGE [V]	FREQUENCY [Hz]	EFFICIENCY	RPM	Notes
///	4,3 4,6	Δ230 / Y400 Δ265 / Y460	50 60	IE3	2800 3600	

22/09/2026 16:08 Subject to change without notice

TSL 550-0 FLEXDRIVE

SIDE CHANNEL BLOWER

VACUUM

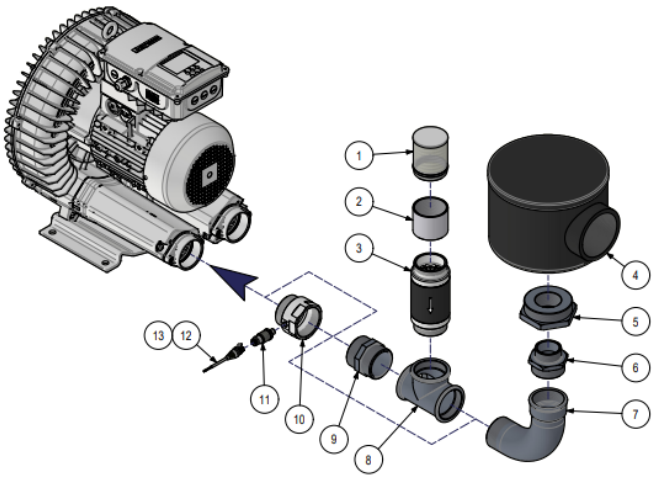

PRESSURE

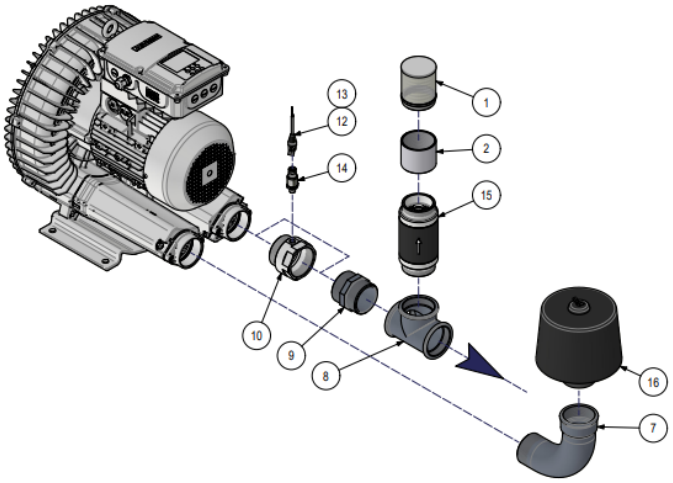

ACCESSORIES

		PART NUMBER
1	Filter FAR	1802025
2	Pipe	5002016
3	Vacuum relief valve	9407018
4	FCM Filter	9001042
5	Reducer	2001046
6	Nipples	2001062
7	Elbow	2101019
8	T Fitting	2106057
9	Nipples	2201008
10	Fitting	4111010
11	Vacuum sensor	1313006
12	Sensor connection cable 1M	1303056
13	Sensor connection cable 5M	1303055
14	Pressure transducer	1313005
15	Pressure relief valve	9408028
16	FAS Filter	9001062

22/09/2026 16:08 Subject to change without notice