# TSL 310-2 FLEXDRIVE

## SIDE CHANNEL BLOWER

### TECHNICAL DATA

| | | TSL 310-2 FLEXDRIVE |
|---|---|---|
| **Part number** | | 9412050/FD |
| **Inverter power** | **kW** | 7 |
| **Inverter power supply** | | 230÷400Vac±20% 50/60Hz |
| **Frequency** | **Hz** | 30 ÷ 60 |
| **Nominal flow rate** | **m³/h** | 376 |
| **MAX Vacuum (Rel.)** | **mbar – hPa** | -320 |
| **MAX Pressure (Rel.)** | **mbar – hPa** | +310 |
| **Maximum inlet air temperature** | **°C** | 40 |
| **Noise level (UNI EN ISO 2151±3dB)** | **dB(A)** | 76 |
| **Weight** | **kg** | 46 |

Subject to change without notice
22/09/2026 16:08

### CURVES

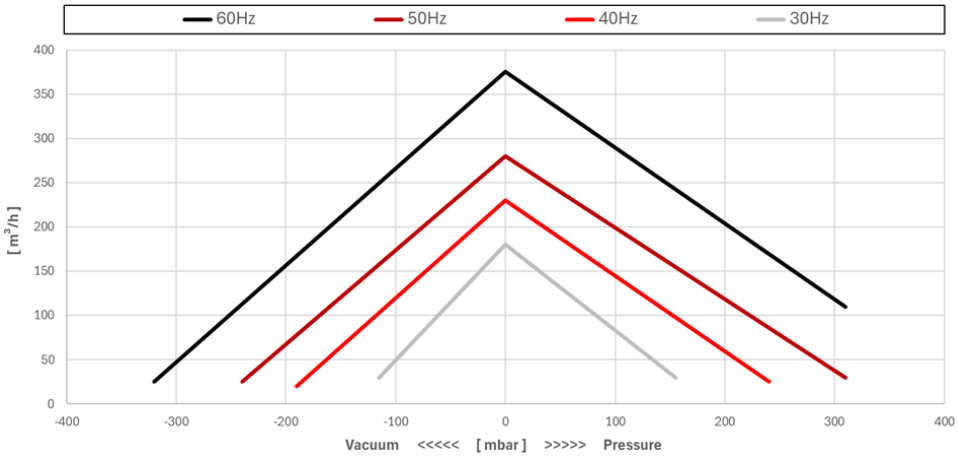


**NOTE: Curves refer to suction pressure and temperature of 20°C (tolerance ±10%)**

# TSL 310-2 FLEXDRIVE

## SIDE CHANNEL BLOWER

### DIMENSIONS

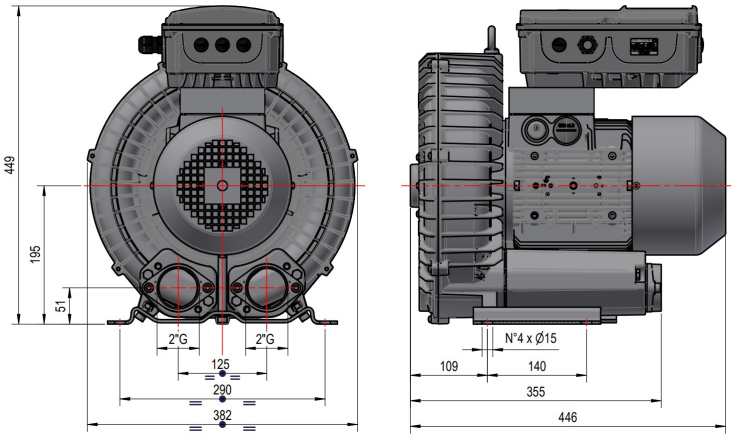


### MOTORS

| TSL 310-2 FLEXDRIVE [3 Phase] | | | | | | |
|---|---|---|---|---|---|---|
| ID | POWER [kW] | VOLTAGE [V] | FREQUENCY [Hz] | EFFICIENCY | RPM | Notes |
| /// | 4,0<br>4,6 | Δ230 / Y400<br>Δ265 / Y460 | 50<br>60 | IE3 | 2800<br>3600 | |

22/09/2026 16:08 Subject to change without notice

# TSL 310-2 FLEXDRIVE

## SIDE CHANNEL BLOWER

### VACUUM

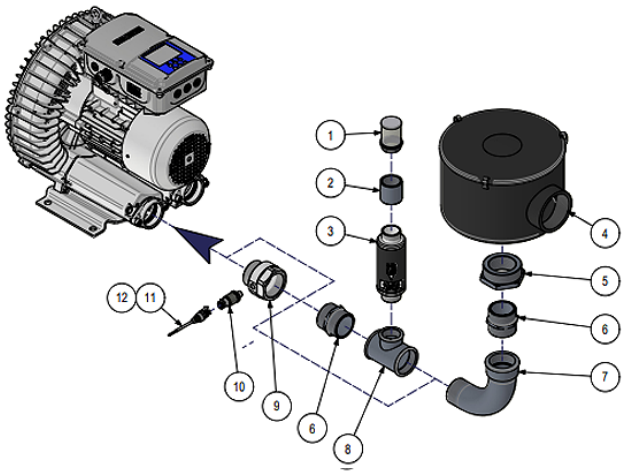


### PRESSURE

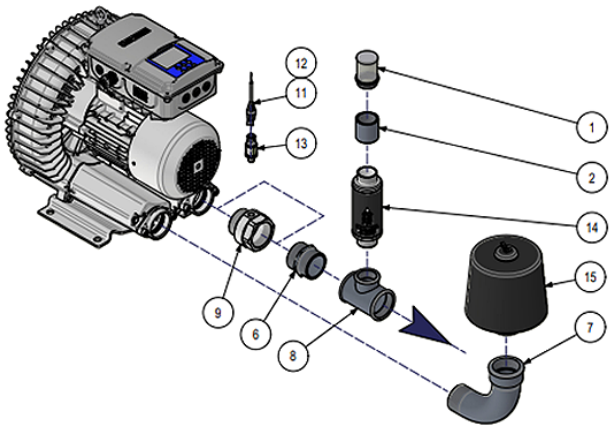


### ACCESSORIES

| | | PART NUMBER |
|---|---|---|
| 1 | Filter FAR | 1802017 |
| 2 | Pipe | 5002011 |
| 3 | Vacuum relief valve | 9407039 |
| 4 | FCM Filter | 9001041 |
| 5 | Reducer | 2001050 |
| 6 | Nipples | 2201007 |
| 7 | Elbow | 2101018 |
| 8 | T Fitting | 2106047 |
| 9 | Fitting | 4111008 |
| 10 | Vacuum sensor | 1313006 |
| 11 | Sensor connection cable 1M | 1303056 |
| 12 | Sensor connection cable 5M | 1303055 |
| 13 | Pressure transducer | 1313005 |
| 14 | Pressure relief valve | 9408042 |
| 15 | FAS Filter | 9001061 |

22/09/2026 16:08 Subject to change without notice