TSL 210 FLEXDRIVE

SIDE CHANNEL BLOWER

TECHNICAL DATA

		TSL 210 FLEXDRIVE
Part number		9412020/FD
Inverter power	**kW**	3
Inverter power supply		230÷400Vac±20% 50/60Hz
Frequency	**Hz**	30 ÷ 60
Nominal flow rate	**m³/h**	255
MAX Vacuum (Rel.)	**mbar – hPa**	-220
MAX Pressure (Rel.)	**mbar – hPa**	+210
Maximum inlet air temperature	**°C**	40
Noise level (UNI EN ISO 2151±3dB)	**dB(A)**	70
Weight	**kg**	25,5

Subject to change without notice
22/09/2026 16:10

CURVES

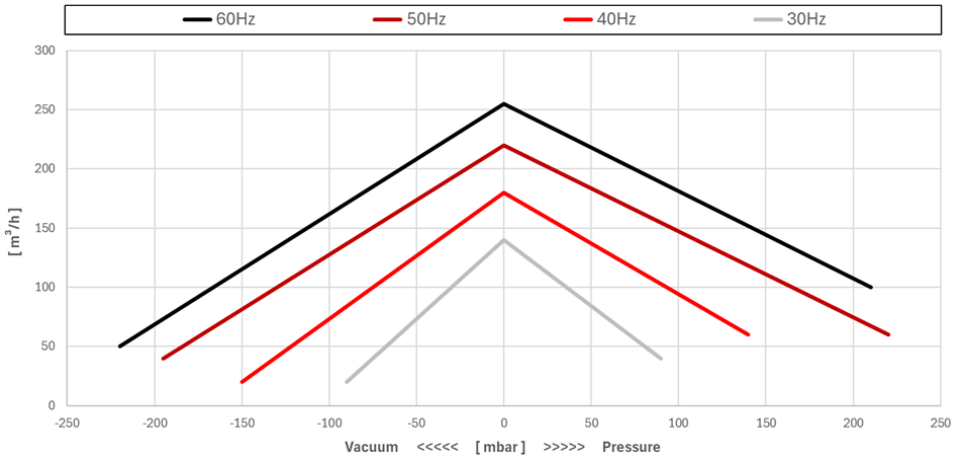

NOTE: Curves refer to suction pressure and temperature of 20°C (tolerance ±10%)

TSL 210 FLEXDRIVE

SIDE CHANNEL BLOWER

DIMENSIONS

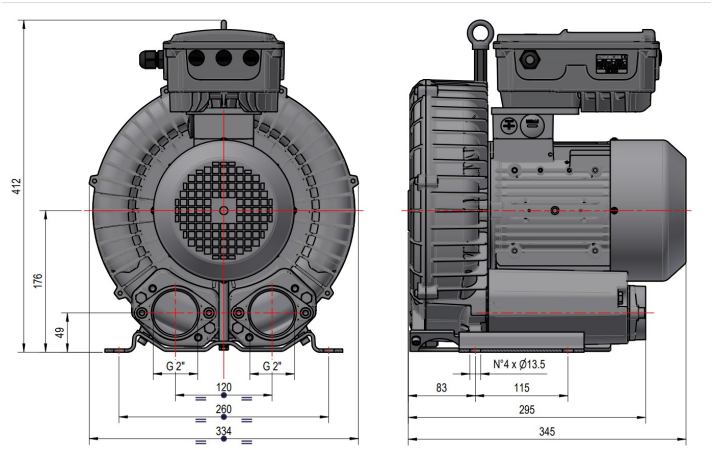

MOTORS

TSL 210 FLEXDRIVE [3 Phase]						
ID	POWER [kW]	VOLTAGE [V]	FREQUENCY [Hz]	EFFICIENCY	RPM	Notes
///	1.6 2.05	Δ230 / Y400 Δ265 / Y460	50 60	IE3	2800 3600	

22/09/2026 16:10 Subject to change without notice

TSL 210 FLEXDRIVE

SIDE CHANNEL BLOWER

VACUUM

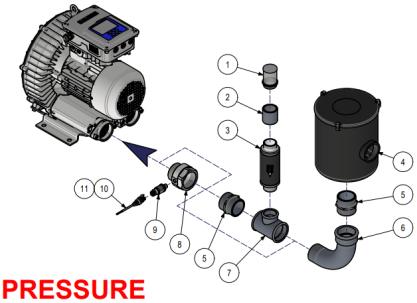

PRESSURE

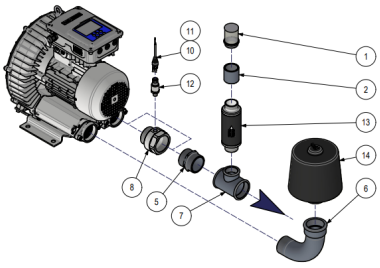

ACCESSORIES

		PART NUMBER
1	Filter FAR	1802017
2	Pipe	5002011
3	Vacuum relief valve	9407034
4	FCM Filter	9001019
5	Nipples	2201007
6	Elbow	2101018
7	T Fitting	2106047
8	Fitting	4111008
9	Vacuum sensor	1313006
10	Sensor connection cable 1M	1303056
11	Sensor connection cable 5M	1303055
12	Pressure transducer	1313005
13	Pressure relief valve	9408046
14	FAS Filter	9001061

22/09/2026 16:10 Subject to change without notice