SC 40

OIL-FREE ROTARY VANE VACUUM PUMP

TECHNICAL DATA

		SC 40
Part number		9801037
Frequency	**Hz**	50 60
Nominal flow rate	**m³/h**	40 48
Final total pressure	**mbar (Abs)**	120
Maximum overpressure	**bar**	0,6
Noise level @ pump (UNI EN ISO 2151±3dB)	**dB(A)**	67 69
Noise level @ compressor (UNI EN ISO 2151±3dB)	**dB(A)**	67 69
Weight	**kg**	45

08/10/2026 15:34 Subject to change without notice

CURVES

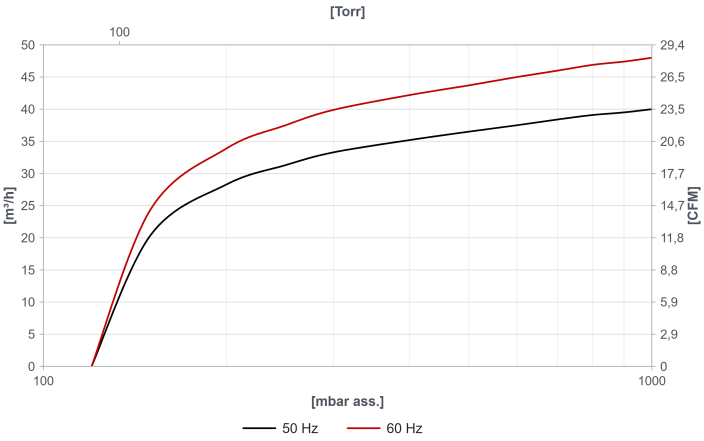

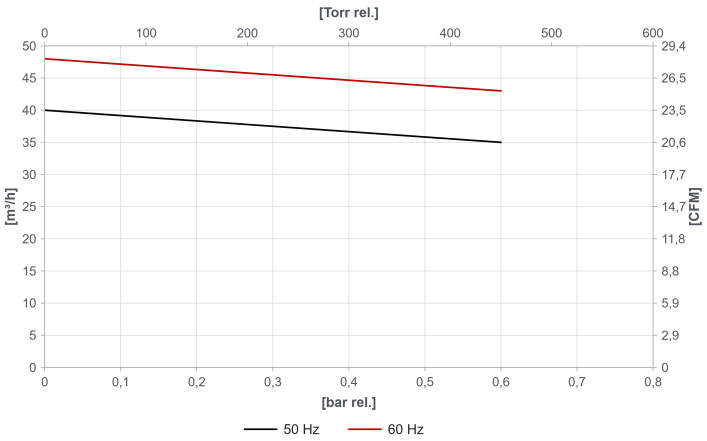

NOTE: Curves refer to suction pressure and temperature of 20°C (tolerance ±10%)

SC 40

OIL-FREE ROTARY VANE VACUUM PUMP

DIMENSIONS

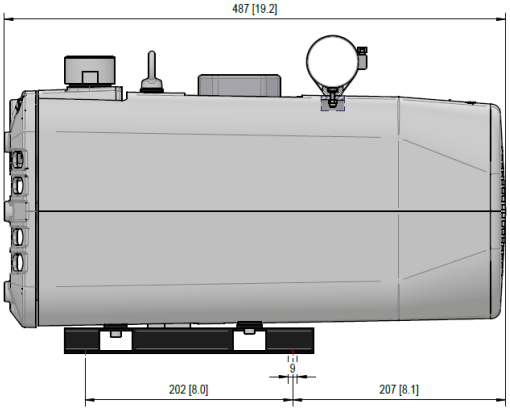

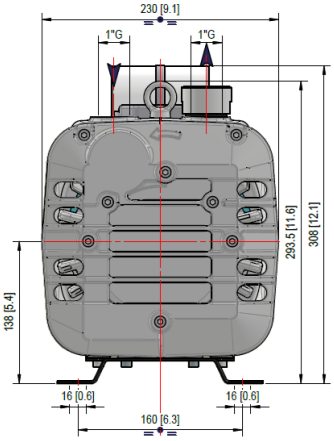

MOTORS

SC 40 [1 Phase]						
ID	**POWER [kW]**	**VOLTAGE [V]**	**FREQUENCY [Hz]**	**EFFICIENCY**	**RPM**	**Notes**
MA	1,3 1,5	220-240	50 60	//	1400 1700	
SC 40 [3 Phase]						
SF	1,3 1,5	Δ230/Y400 Δ265/Y460	50 60	IE3	1400 1700	
SL	1,3 1,5 1,5	YY190-200/Y380-400 YY208-230/Y460 YY200-220/Y400-440	50 60 60	IE3	1400 1700 1700	UL

08/10/2026 15:34 Subject to change without notice

SC 40

OIL-FREE ROTARY VANE VACUUM PUMP

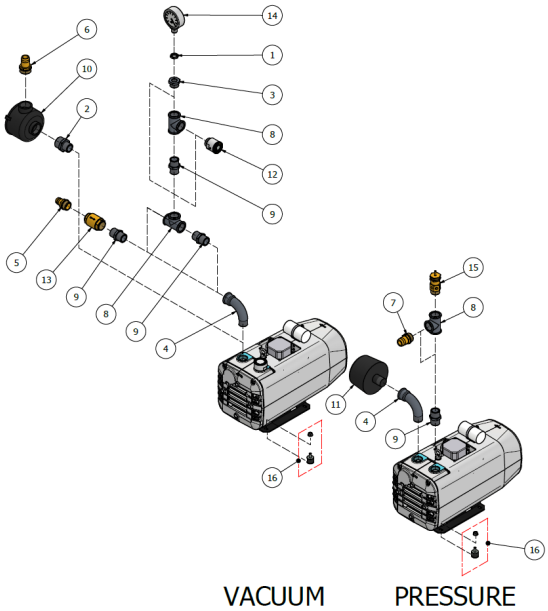

ACCESSORIES

		PART NUMBER
1	Nut	0202004
2	Nipples	2001010
3	Reducer	2001041
4	Elbow	2101017
5	Hose barb fitting ATG	2103012
6	Hose barb fitting ATG	2103013
7	Hose barb fitting ATG	2103023
8	T Fitting	2106060
9	Nipples	2201004
10	FCM Filter	9001022
11	Vacuum regulating valve	9004018
12	VNE Valve	9007006
13	VMR Vacuum Gauge	9009003
14	Pressure relief valve	9012013
15	FAS Filter	9001058
16	Anti-vibration mount kit	KA000003

08/10/2026 15:34 Subject to change without notice