RC 8D

OIL-LUBRICATED ROTARY VANE VACUUM PUMP

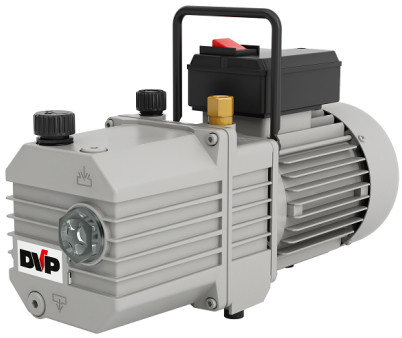

TECHNICAL DATA

		RC 8D
Part number		9602021
Frequency	**Hz**	50 60
Number of stages		2
Nominal flow rate	**m³/h**	8,5 10,2
Pneurop flow rate	**m³/h**	8 9,5
Final pressure Gas Ballast closed	**mbar (Abs)**	0,01
Partial final pressure	**mbar (Abs)**	0,005
Final pressure Gas Ballast open	**mbar (Abs)**	0,2
Max inlet pressure for water vapour	**mbar (Abs)**	20
Max water vapour pumping rate	**kg/h**	0,09
Oil type		SW60
Oil capacity (Min - Max)	**dm³**	0,35
Noise level (UNI EN ISO 2151±3dB)	**dB(A)**	52 54
Weight	**kg**	13,2

23/11/2026 15:35 Subject to change without notice

CURVES

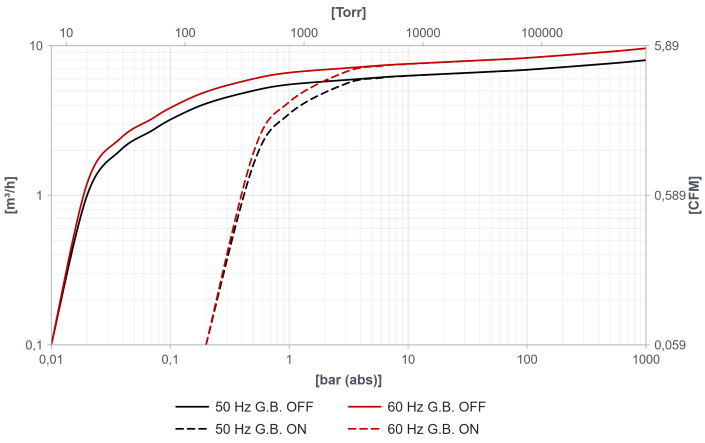

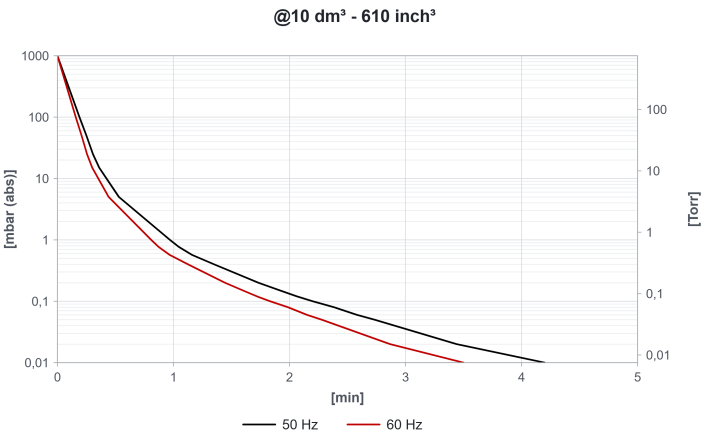

NOTE: Curves refer to suction pressure and temperature of 20°C (tolerance ±10%)

RC 8D

OIL-LUBRICATED ROTARY VANE VACUUM PUMP

DIMENSIONS

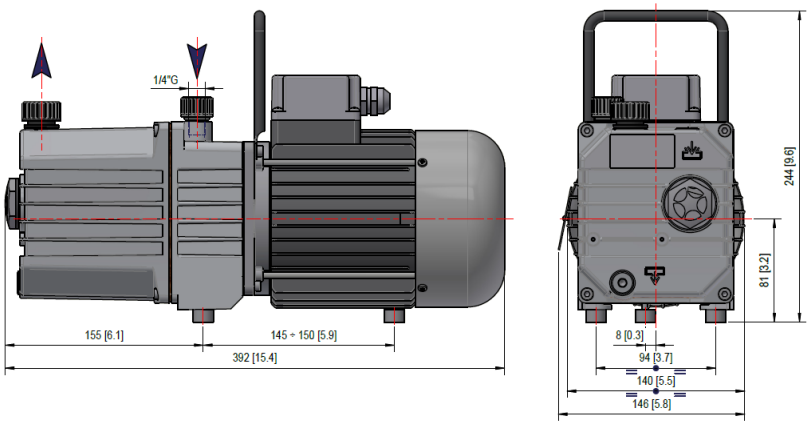

MOTORS

RC 8D [1 Phase]						
ID	**POWER [kW]**	**VOLTAGE [V]**	**FREQUENCY [Hz]**	**EFFICIENCY**	**RPM**	**Notes**
MA	0,37 0,37	220-240	50 60	-	1400 1700	
ML	0,37 0,37	115-230	50 60	-	1400 1700	
RC 8D [3 Phase]						
TX	0,37 0,37	Δ230/Y400 Δ265/Y460	50 60	IE2	1400 1700	

23/11/2026 15:35 Subject to change without notice

RC 8D

OIL-LUBRICATED ROTARY VANE VACUUM PUMP

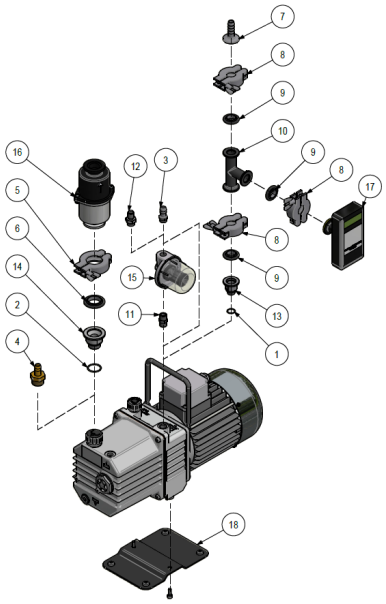

ACCESSORIES

		PART NUMBER
1	O-ring	1001010
2	O-ring	1001044
3	Hose barb fitting ATG	2103006
4	Hose barb fitting ATG	2103008
5	Clamping ring KF	2104001
6	Centring ring	2104002
7	Hose barb fitting ATG	2104010
8	Clamping ring KF	2104011
9	Centring ring	2104012
10	T Fitting	2104022
11	Nipples	2201001
12	JIC fitting	2203001
13	Inlet fitting	4508023
14	Fitting	4605017
15	Cartridge Filter	9001004
16	FDS Filter	9001054
17	VD Vacuum Gauge	9009052
18	Support base kit	9016003

VARIANTS

PFPE	Applications with over-concentration of Oxygen
FKM	Pump with FKM seals

23/11/2026 15:35 Subject to change without notice