RC 4M

OIL-LUBRICATED ROTARY VANE VACUUM PUMP



TECHNICAL DATA

		RC 4M
Part number		9601038
Frequency	**Hz**	50 60
Number of stages		1
Nominal flow rate	**m³/h**	4,3 5
Pneurop flow rate	**m³/h**	4 4,6
Final pressure Gas Ballast closed	**mbar (Abs)**	0,1
Partial final pressure	**mbar (Abs)**	0,05
Final pressure Gas Ballast open	**mbar (Abs)**	3
Max inlet pressure for water vapour	**mbar (Abs)**	40
Max water vapour pumping rate	**kg/h**	0,1
Oil type		SW60
Oil capacity (Min - Max)	**dm³**	0,45
Noise level (UNI EN ISO 2151±3dB)	**dB(A)**	52 54
Weight	**kg**	11

09/09/2026 09:30 Subject to change without notice

CURVES

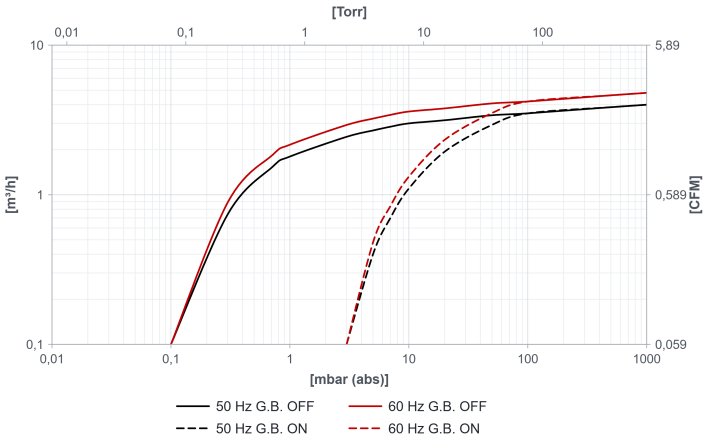

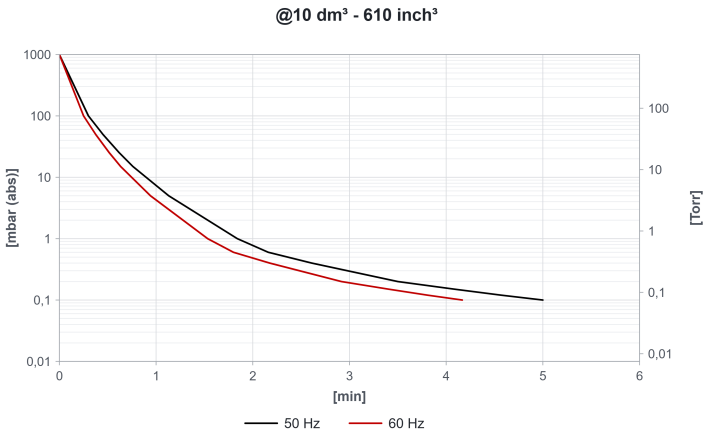

NOTE: Curves refer to suction pressure and temperature of 20°C (tolerance ±10%)

RC 4M

OIL-LUBRICATED ROTARY VANE VACUUM PUMP

DIMENSIONS

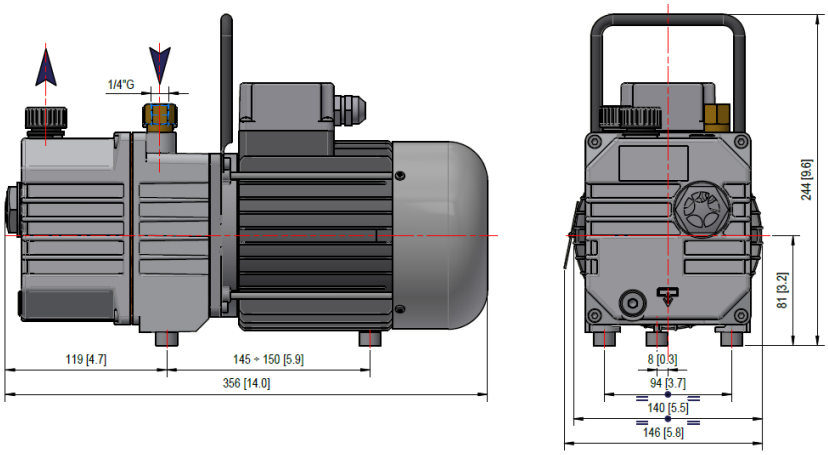

MOTORS

RC 4M [1 Phase]						
ID	**POWER [kW]**	**VOLTAGE [V]**	**FREQUENCY [Hz]**	**EFFICIENCY**	**RPM**	**Notes**
MA	0,37 0,37	220-240	50 60	-	1400 1700	
ML	0,37 0,37	115-230	50 60	-	1400 1700	
RC 4M [3 Phase]						
TX	0,37 0,37	Δ230/Y400 Δ265/Y460	50 60	IE2	1400 1700	

09/09/2026 09:30 Subject to change without notice

RC 4M

OIL-LUBRICATED ROTARY VANE VACUUM PUMP

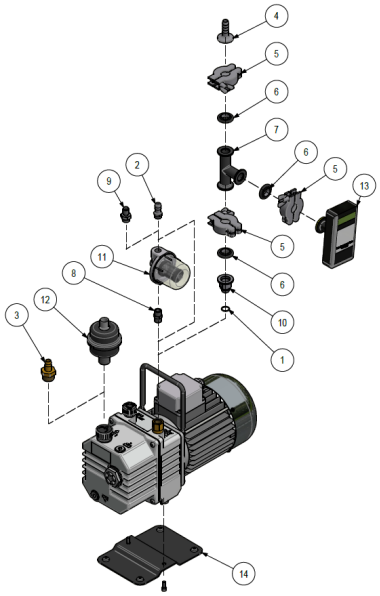

ACCESSORIES

		PART NUMBER
1	O-ring	1001010
2	Hose barb fitting ATG	2103006
3	Hose barb fitting ATG	2103008
4	Hose barb fitting ATG	2104010
5	Clamping ring KF	2104011
6	Centring ring	2104012
7	T Fitting	2104022
8	Nipples	2201001
9	JIC fitting	2203001
10	Inlet fitting	4508023
11	Cartridge Filter	9001004
12	FDS Filter	9001039
13	VD Vacuum Gauge	9009052
14	Support base kit	9016003

VARIANTS

FKM	Pump with FKM seals

09/09/2026 09:30 Subject to change without notice