RC 4D

OIL-LUBRICATED ROTARY VANE VACUUM PUMP



TECHNICAL DATA

		RC 4D
Part number		9602020
Frequency	**Hz**	50 60
Number of stages		2
Nominal flow rate	**m³/h**	4,3 5
Pneurop flow rate	**m³/h**	4 4,6
Final pressure Gas Ballast closed	**mbar (Abs)**	0,01
Partial final pressure	**mbar (Abs)**	0,005
Final pressure Gas Ballast open	**mbar (Abs)**	0,2
Max inlet pressure for water vapour	**mbar (Abs)**	20
Max water vapour pumping rate	**kg/h**	0,05
Oil type		SW60
Oil capacity (Min - Max)	**dm³**	0,35
Noise level (UNI EN ISO 2151±3dB)	**dB(A)**	52 54
Weight	**kg**	12

09/09/2026 09:30 Subject to change without notice

CURVES

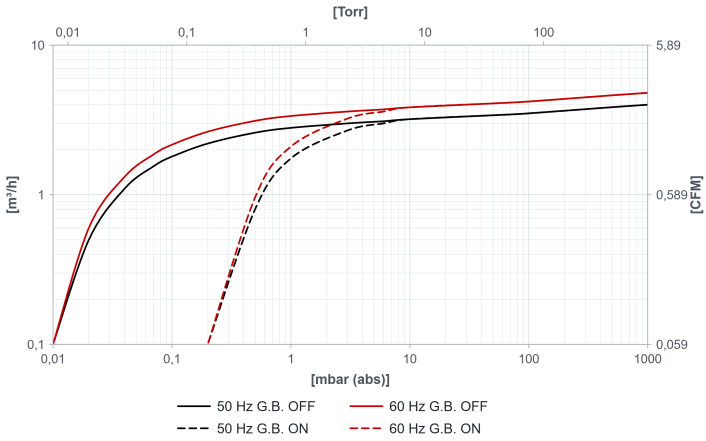

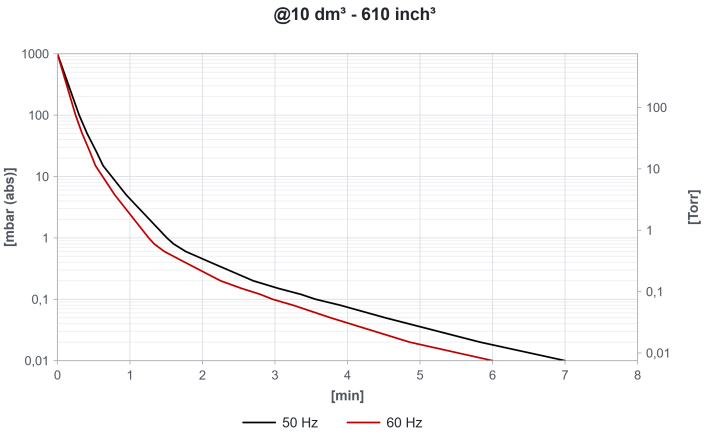

NOTE: Curves refer to suction pressure and temperature of 20°C (tolerance ±10%)

RC 4D

OIL-LUBRICATED ROTARY VANE VACUUM PUMP

DIMENSIONS

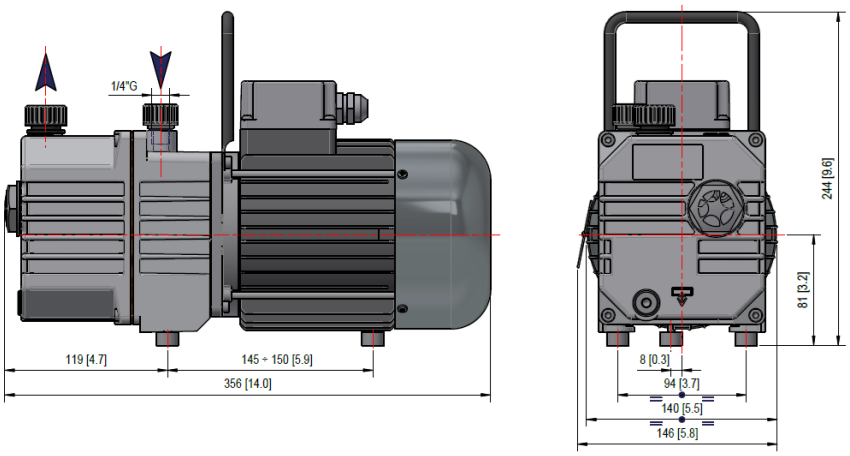

MOTORS

RC 4D [1 Phase]						
ID	**POWER [kW]**	**VOLTAGE [V]**	**FREQUENCY [Hz]**	**EFFICIENCY**	**RPM**	**Notes**
MA	0,37 0,37	220-240	50 60	-	1400 1700	
ML	0,37 0,37	115-230	50 60	-	1400 1700	
RC 4D [3 Phase]						
TX	0,37 0,37	Δ230/Y400 Δ265/Y460	50 60	IE2	1400 1700	

09/09/2026 09:30 Subject to change without notice

RC 4D

OIL-LUBRICATED ROTARY VANE VACUUM PUMP

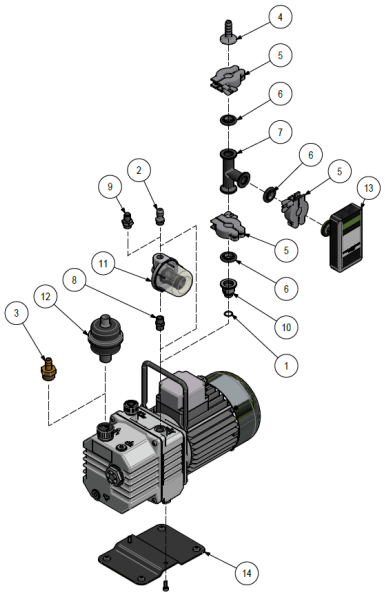

ACCESSORIES

		PART NUMBER
1	O-ring	1101010
2	Hose barb fitting ATG	2103006
3	Hose barb fitting ATG	2103008
4	Hose barb fitting ATG	2104010
5	Clamping ring KF	2104011
6	Centring ring	2104012
7	T Fitting	2104022
8	Nipples	2201001
9	JIC fitting	2203001
10	Inlet fitting	4508023
11	Cartridge Filter	9001004
12	FDS Filter	9001039
13	VD Vacuum Gauge	9009052
14	Support base kit	9016003

VARIANTS

PFPE	Applications with over-concentration of Oxygen
FKM	Pump with FKM seals

09/09/2026 09:30 Subject to change without notice