DC 16DEX

OIL-LUBRICATED ROTARY VANE VACUUM PUMP



TECHNICAL DATA

		DC 16DEX
Part number		9602028
ATEX certification code		II 3/-G Ex h IIC T4 X Gc
Frequency	**Hz**	50 60
Number of stages		2
Nominal flow rate	**m³/h**	17 21
Pneurop flow rate	**m³/h**	16 17
Final pressure Gas Ballast closed	**mbar (Abs)**	0,005
Partial final pressure	**mbar (Abs)**	0,0005
Final pressure Gas Ballast open	**mbar (Abs)**	0,08
Max inlet pressure for water vapour	**mbar (Abs)**	17 23
Max water vapour pumping rate	**kg/h**	0,22 0,35
Oil type		SW100
Oil capacity (Min - Max)	**dm³**	0,62÷0,80
Noise level (UNI EN ISO 2151±3dB)	**dB(A)**	52 54
Weight	**kg**	26

09/09/2026 12:55 Subject to change without notice

DC 16DEX

OIL-LUBRICATED ROTARY VANE VACUUM PUMP

CURVES

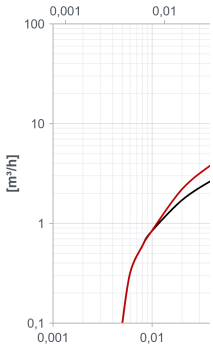

DIMENSIONS

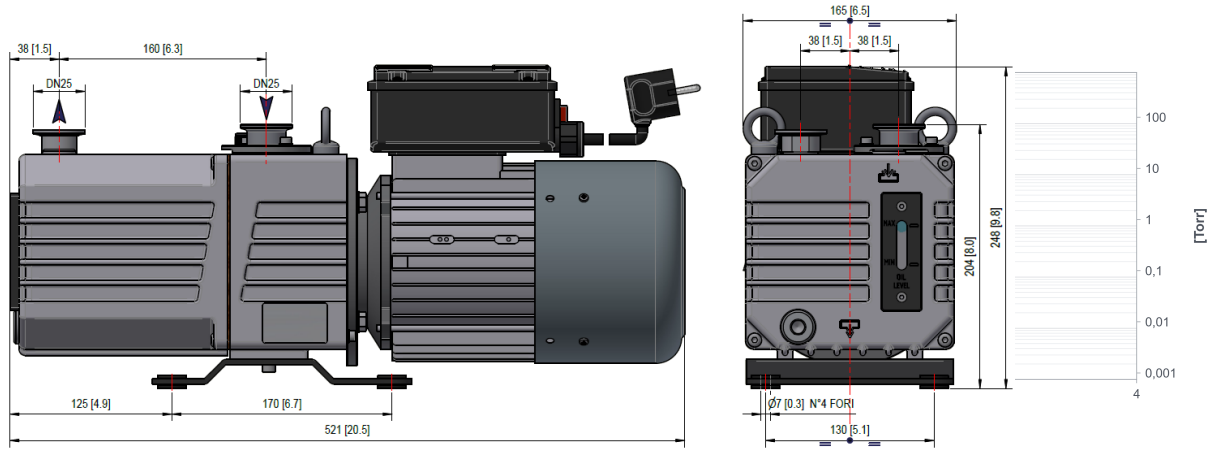

MOTORS

NOTE: Curves refer to suction pressure and temperature of 20°C (tolerance ±10%)

ID	POWER [kW]	VOLTAGE [V]	FREQUENCY [Hz]	EFFICIENCY	RPM	Notes
DC 16DEX [1 Phase]						
MA	0,75 0,9	220-240	50 60	-	1400 1700	
DC 16DEX [3 Phase]						
TX	0,55 0,55	Δ230/Y400 Δ265/Y460	50 60	IE2	1400 1700	

09/09/2026 12:55 Subject to change without notice

DC 16DEX

OIL-LUBRICATED ROTARY VANE VACUUM PUMP

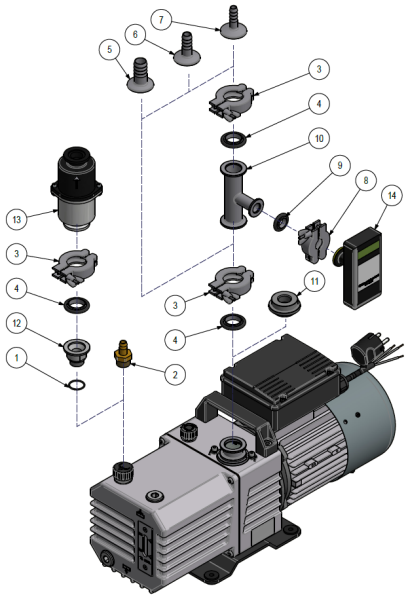

ACCESSORIES

		PART NUMBER
1	O-ring	1001044/V
2	Hose barb fitting ATG	2103008
3	Clamping ring KF	2104001
4	Centring ring	2104002
5	Hose barb fitting ATG	2104003 (DN25x20)
6	Hose barb fitting ATG	2104004 (DN25x15)
7	Hose barb fitting ATG	2104007 (DN25x12)
8	Clamping ring KF	2104011
9	Centring ring	2104012
10	T Fitting	2104016
11	Inlet fitting	4508016
12	Fitting	4605017
13	FDS Filter	9001054
14	VD Vacuum Gauge	9009052

09/09/2026 12:55 Subject to change without notice