DB 2D

OIL-LUBRICATED ROTARY VANE VACUUM PUMP

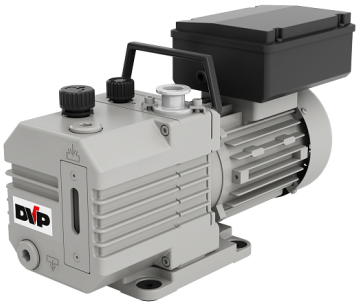

TECHNICAL DATA

		DB 2D
Part number		9602017
Frequency	**Hz**	50 60
Number of stages		2
Nominal flow rate	**m³/h**	2,4 2,9
Pneurop flow rate	**m³/h**	2 2,4
Final pressure Gas Ballast closed	**mbar (Abs)**	0,005
Partial final pressure	**mbar (Abs)**	0,0005
Final pressure Gas Ballast open	**mbar (Abs)**	0,2
Max inlet pressure for water vapour	**mbar (Abs)**	15
Max water vapour pumping rate	**kg/h**	0,02
Oil type		SW60
Oil capacity (Min - Max)	**dm³**	0,26÷0,37
Noise level (UNI EN ISO 2151±3dB)	**dB(A)**	52 54
Weight	**kg**	5

09/09/2026 09:56 Subject to change without notice

CURVES

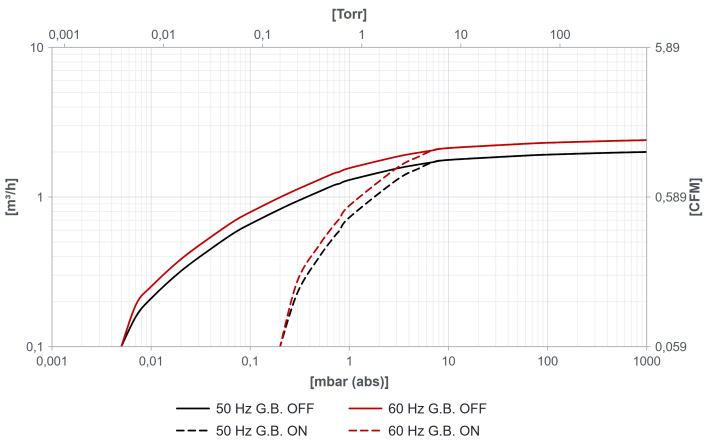

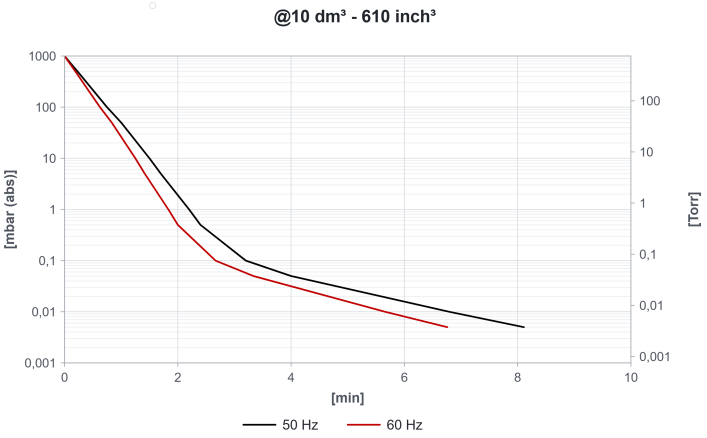

NOTE: Curves refer to suction pressure and temperature of 20°C (tolerance ±10%)

DB 2D

OIL-LUBRICATED ROTARY VANE VACUUM PUMP

DIMENSIONS

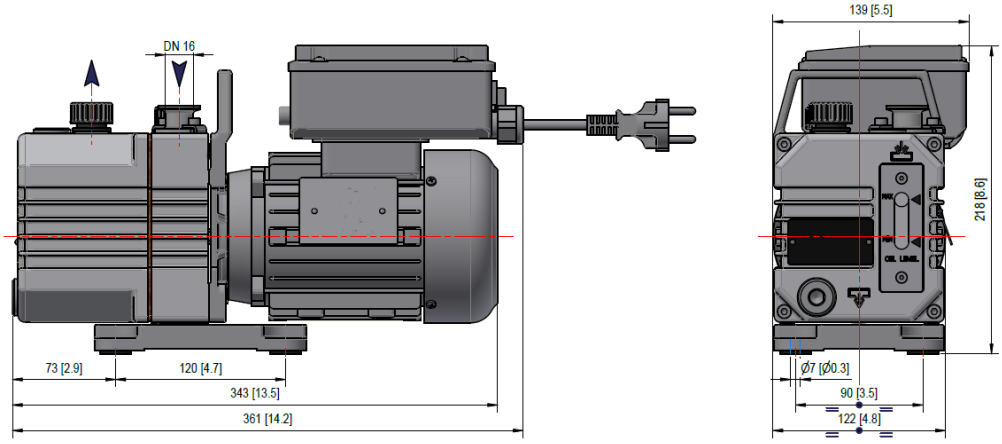

MOTORS

DB 2D [1 Phase]						
ID	**POWER [kW]**	**VOLTAGE [V]**	**FREQUENCY [Hz]**	**EFFICIENCY**	**RPM**	**Notes**
MA	0,25 0,3	220-240	50 60	-	2800 3300	

09/09/2026 09:56 Subject to change without notice

DB 2D

OIL-LUBRICATED ROTARY VANE VACUUM PUMP

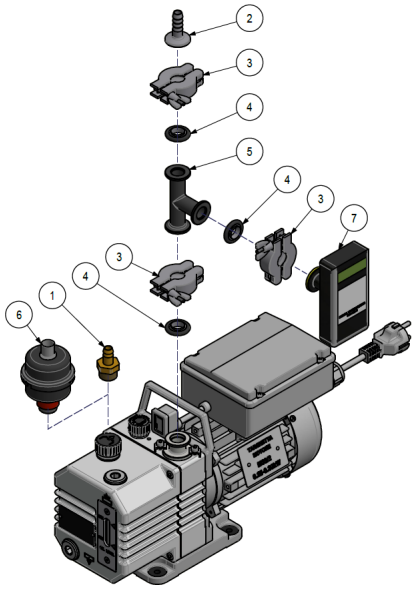

ACCESSORIES

		PART NUMBER
1	Hose barb fitting ATG	2103008
2	Hose barb fitting ATG	2104010
3	Clamping ring KF	2104011
4	Centring ring	2104012
5	T Fitting	2104022
6	FDS Filter	9001039
7	VD Vacuum Gauge	9009052

09/09/2026 09:56 Subject to change without notice